# Great Demand and Great Challenge

***Chinese Major Bridges under Construction for Improving Traffic Infrastructure Nationwide***

**Yao Jun GE**
Professor
Department of Bridge Engineering
Tongji University
Shanghai, 200092, China
yaojunge@mail.tongji.edu.cn

Yao Jun Ge, born 1958, received his PhD degree in bridge engineering from Tongji University. He is the chairman of Department of Bridge Engineering.

**Hai Fan XIANG**
Emeritus Professor
College of Civil Engineering
Tongji University
Shanghai, 200092, China
hfxiang@mail.tongji.edu.cn

Hai Fan Xiang, born 1935, received his MSc degree in bridge engineering from Tongji University. He is the consulting dean of College of Civil Engineering.

## Summary

Under the background of high annual growth rates of GDP, China has experienced with the ever-growing demand in improving traffic infrastructure nationwide for about three decades, which results in intensive investment in traffic infrastructure development, in particular highway transportation construction. Two ground plans, the National Trunk Highway System and the National Expressway Network, have been launched successively, and thousands of highway bridges have been built for each year. In order to meet with the great demand in highway bridge development, Chinese bridge community is facing several challenges in the design and analysis of major bridges, especially of super long-span bridges. Aerodynamic challenge of suspension bridges was introduced by three typical examples including a single-box-girder with a central stabilizer, a twin-box-girder and a trial design with the combination of stabilizers and central slotted decks. Bridging capacity challenge was explained by three cable-stayed bridges with about 1000 m main span and a record-breaking span-length arch bridge. The other technical challenge was focused on the rational design and analysis of a double main span suspension bridge and a twin parallel deck cable-stayed bridge.

**Keywords**: Traffic infrastructure development; major bridge construction; aerodynamic challenge; bridging capacity challenge; double main span bridge; twin parallel deck bridge.

## 1. Introduction

As a developing country, China has an ancient history that goes back about 5,000 years. The Chinese have built thousands of bridges, which form an important part of China's culture. For example, Zhaozhou Stone Arch Bridge served for more than 1400 years and iron chain suspension bridges built in ancient time play an important role in the world history of bridge development. Unfortunately, in the era of modern bridge construction beginning with the 19th century, China gradually fell behind the western countries for about 200 years.

It was not until the 1980's, with the rapid increase of China's economy, that bridge engineering in China entered a golden period. Under the continued growth of the national Gross Domestic Product (GDP) and the constant increase of investment in traffic infrastructure, the National Trunk Highway System has been almost completed, and thousands of highway bridges have been built for each year. Up to the end of 2005, the total number of highway bridges has reached 336,600 with a total length of 14,700 linear kilometers, among which there are 38 major bridges with a main span over 400. In order to meet with great demand in traffic infrastructure, the National Expressway Network Plan has launched, and numerous highway bridges including 26 major bridges are currently under design and construction. Chinese bridge engineers are facing various challenges in suspension bridge aerodynamics, bridging capacity of cable-stayed bridges and arch bridges and the technical challenge on bridging longer water body or providing wider traffic passageway.

## 2. Traffic Infrastructure Development

With the implementation of the reform and open policy since 1978, China's economy has becoming soaring for about three decades with high annual growth rate of GDP, which results in great demand in development of traffic infrastructure, in particular highway transportation system. The investment of traffic infrastructure has tripled for the past decade, and the National Trunk Highway System (NTHS) with a total length of 35,000 km is nearly completed within about 20 years.

### 2.1 Investment in highway traffic infrastructure

China has experienced with the rapid economic development and great social transformation for about 30 years began with the reform and open policy execution in 1978. According to the fixed price statistics, the national GDP was only countered in 365 billion Chinese yuan in 1978, and the GDP amount in 2005 was tremendously increased up to 18,396 billion yuan, which is about 50 times of the amount in 27 years ago. The GDP development of China for the past 27 years can be summarized in Fig.1 with the annual amount in Chinese yuan[1].

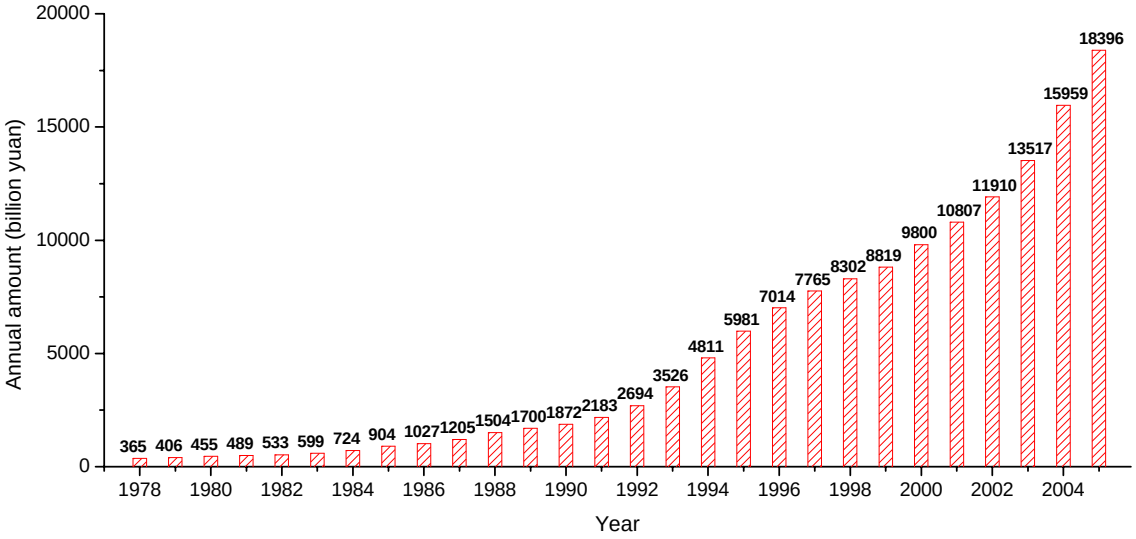


Fig. 1 *Annual amount of GDP in China from 1978 to 2005*

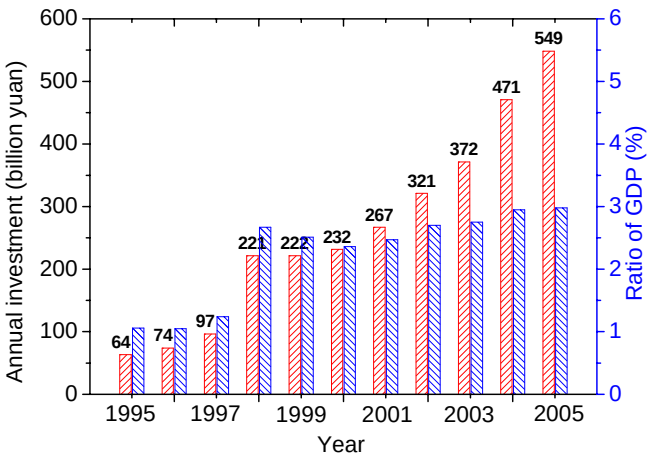


Fig. 2 *Annual investment from 1995 to 2005*

The economic increase and social structure variation have exerted strong impact on transportation demand, and especially highway transport has assumed an extraordinarily importance in the multi-mode transportation context. A flexible, comfortable, economical, fast and safe modern highway system in China has been under developed to meet with the ever-growing traffic demand. The central government and local government has deeply realised this importance and has increasingly invested in highway traffic infrastructure since 1978, in particular from 1995 to 2005. Fig. 2 shows the annual investment in highway traffic infrastructure and the ratio of this amount to GDP in this decade[2].

### 2.2 National Trunk Highway System construction

With the intensive investment in traffic infrastructure, highway engineering work has progressed achieving marvellous success. Before the first expressway completed in China in 1988, the highway mileage totalled just 1 million kilometres, which is 117,500 km more than that in 1978, or an increase of 11,750 km per year for the first decade experienced. In order to speed up expressway construction, China launched the planning of the National Trunk Highway System (NTHS) in 1989, which is mainly composed of 12 access controlled expressways including 5 north-south

longitudinal and 7 east-west transverse lines with a total length of 35,000 km. Since then, expressway construction in China has experienced two stages of development, the initial development decade from 1988 to 1997 with an annual increase of 514 km and the rapid development stage from 1998 to 2005 with an annual increase of 4530 km, shown in Fig. 3. Meanwhile, the total highway construction has also developed very fast with the annual increases of 252,000 km and 880,000 km for the initial and rapid stages, respectively, plotted in Fig. 3. Up to the end of 2005, the mileage reached 41,005 km for expressway and 1.93 million kilometres for total highway, respectively[2]. The NTHS was originally planned to be completed within 30 years by 2020 to link up all cities with a population over one million and 93% of cities with more than half a million. With the increasingly investment, however, the construction of the NTHS has been greatly accelerated and will be finished by 2008, 12 years ahead of the schedule.

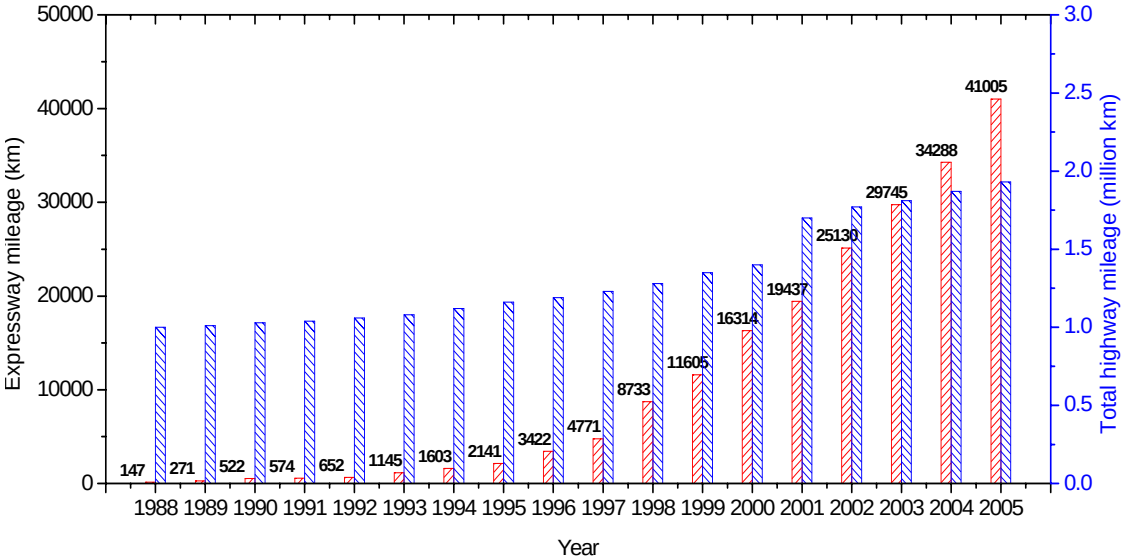


Fig. 3 *Expressway and total highway mileages from 1988 to 2005*

## 2.3 Highway bridge development

During the golden period of highway engineering from 1988 to 2005, the unprecedented development of highway bridge construction has been experienced in the country. Up to the end of 2005, the total number and the total length of highway bridges increased to 336,600 and 14,700 km, respectively, which are almost doubled in the number and tripled in the length in 1988, and the detailed figures for each year are represented in Fig. 4[2].

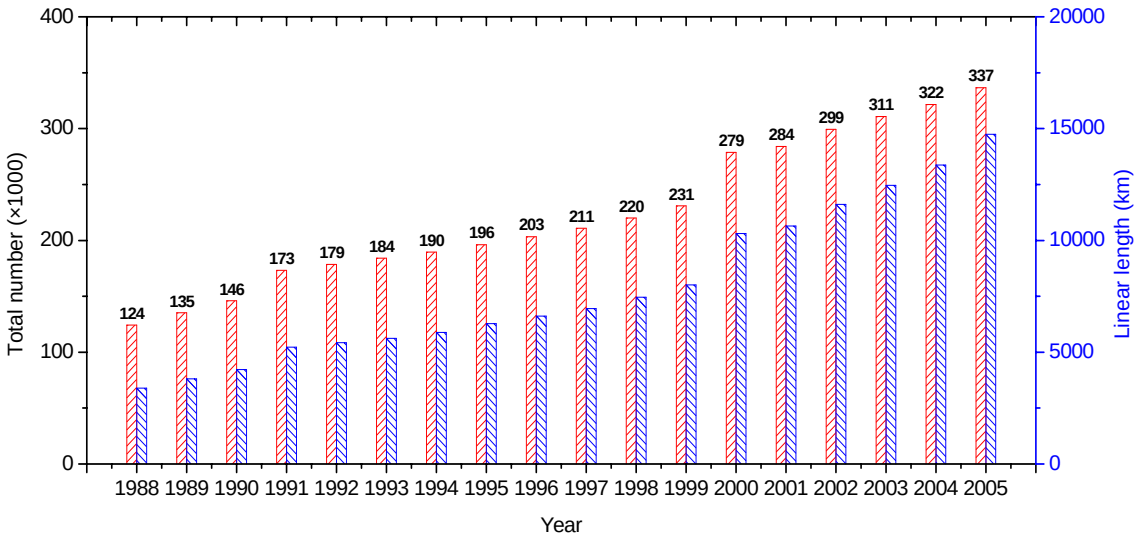


Fig. 4 *Total number and linear length of highway bridges from 1988 to 2005*

Among the total number of highway bridges, there are 38 major bridges with a main span over 400

m, including 13 suspension bridges, 22 cable-stayed bridges and 3 arch bridges, which are listed in Table 1. The main span lengths of cable-supported bridges are raised up to 1490m for suspension bridges, Runyang Bridge shown in Fig. 5a, and 648m for cable-stayed bridges, the 3rd Nanjing Bridge in Fig. 5b, respectively, while China keeps the world record span lengths for both steel arch bridge, Lupu Bridge with a main span of 550m (Fig. 5c), and concrete arch bridge, Wanxian Bridge with the 420m centre span (Fig. 5d)[3].

Table 1 *Completed major bridges with a main span over 400 m*

| Type | No | Bridge Name | Main Span | Year Built | No | Bridge Name | Main Span | Year Built |
|---|---|---|---|---|---|---|---|---|
| Suspension | 1 | Tibet Dazi | 500m | 1984 | 8 | Jiangsu Jiangyin | 1385m | 1999 |
| | 2 | Shantou Bay | 452m | 1995 | 9 | Sichuan Egongyan | 600m | 2000 |
| | 3 | Hubei Xiling | 900m | 1996 | 10 | Sichuan Zhongxian | 560m | 2001 |
| | 4 | Sichuan Fengdu | 450m | 1997 | 11 | Hubei Yicang | 960m | 2001 |
| | 5 | Guangdong Humen | 888m | 1997 | 12 | 2nd Sichuan Wanxian | 580m | 2004 |
| | 6 | Hongkong Tsingma | 1377m | 1997 | 13 | Jiangsu Runyang S. | 1490m | 2005 |
| | 7 | Xiamen Haicang | 648m | 1999 | | | | |
| Cable-Stayed | 1 | Shanghai Nanpu | 423m | 1991 | 12 | Chongqing Dafosi | 450m | 2001 |
| | 2 | Hubei Yunyan | 414m | 1993 | 13 | 2nd Jiangsu Nanjing | 628m | 2001 |
| | 3 | Shanghai Yangpu | 602m | 1993 | 14 | Hubei Junshan | 460m | 2002 |
| | 4 | Anhui Tongling | 432m | 1995 | 15 | Hubei Jingzhou | 500m | 2002 |
| | 5 | 2nd Hubei Wuhan | 400m | 1995 | 16 | Hubei Ehuang | 480m | 2002 |
| | 6 | Chongqing Lijiatuo | 444m | 1996 | 17 | Zhejian Taoyaomen | 580m | 2003 |
| | 7 | Shanghai Xupu | 590m | 1997 | 18 | Fujian Qingzhou | 605m | 2003 |
| | 8 | H.K. Kap Shui Mun | 430m | 1997 | 19 | Anhui Anqing | 510m | 2004 |
| | 9 | Hong Kong Tingkau | 475m | 1998 | 20 | East Sea Main Bridge | 420m | 2005 |
| | 10 | Hubei Queshi | 518m | 1999 | 21 | 3rd Jiangsu Nanjing | 648m | 2005 |
| | 11 | Hubei Baishazhou | 618m | 2000 | 22 | Jiangsu Runyang N. | 406m | 2005 |
| Arch | 1 | Shanghai Lupu | 550m | 2003 | 3 | 1st Sichuan Wanxian | 420m | 2001 |
| | 2 | Sichuan Wushan | 460m | 2005 | | | | |

(a) *Runyang Suspension Bridge*

(b) *The 3rd Nanjing Cable-Stayed Bridge*

(c) *Lupu Arch Bridge*

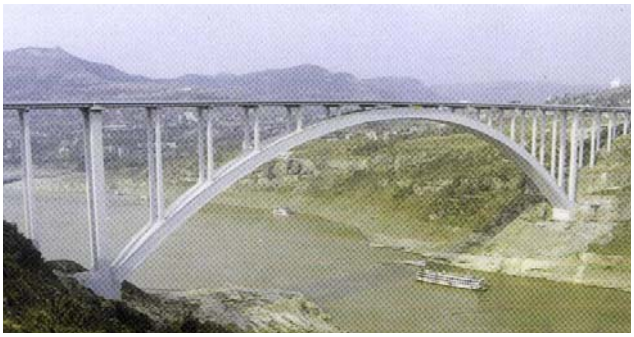

(d) *Wanxian Concrete Arch Bridge*

Fig. 5 *The longest span bridges completed in China*

## 3. Improvement Plan of Traffic Infrastructure

After the first phase of traffic infrastructure development in the past three decades, China is now in the new process of planning and investing the grand traffic infrastructure – the National Expressway Network. More than twenty remarkable bridge projects are currently designed and constructed, for example, Hangzhou Bay Crossing Project, Zhoushan Island-Mainland Connection Project, Shanghai Tunnel and Bridge Corridor Project, Sutong Bridge, Taizhou Bridge, and so on.

### 3.1 National Expressway Network plan

Although traffic infrastructure development has achieved great success for the past three decades, for example, the expressway mileage in China ranking the second in the world, highway transportation system is still behind developed countries in terms of land density and per capital mileage. Based on territory area, the expressway density in China is only about 27% of USA, 16% of Japan and 8% of Germany, respectively. In order to narrow the gap with the developed countries and to meet the needs of fast and constant economic development, the plan of the National Expressway Network was approved by the State Council of China at the end of 2004. The National Expressway Network falls into the category of National Roads with a relatively independent system, which connects all the cities with a population over 200,000 and covers the area settled with one billion populations and contributed to 85% GDP. The network consists mainly 7 radiating routes centred in Beijing, 9 north-south routes and 18 east-west routes, namely as “7918”, with a total length of about 85,000 km. Among the total length of the network, there are about 29,000 km completed part, 16,000 km part under construction, and 40,000 km part to be built. The whole network is planed to be completed in 2020[4].

### 3.2 Traffic infrastructure financing analysis

To ensure adequate investment in highway construction become increasingly important for the sustainable development of China’s highway transport sector. To realize the planning of the National Expressway Network, the most important thing is to keep consistent investment in highway infrastructure, especially in expressway construction. The budget of this plan is estimated as 2 trillion yuan in total or about 130 billion yuan per year from 2005 to 2020. Taking as an example of 2005, the current funding sources for traffic infrastructure construction and maintenance can be divided into six components, including local government grants and bonds (43.1%), domestic loans (38.2%), foreign loans and investment (1.3%), vehicle purchase tax (10.3%), central government grants (2.4%) and the rest investment of last year (4.7%) shown in Fig. 6[2].

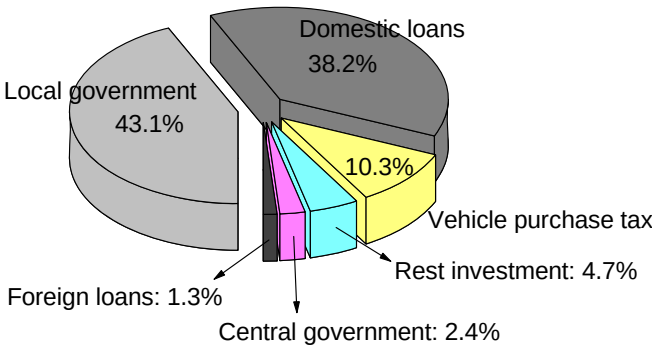


Fig. 6 *Investment components*

The first three components will be refunded after completion, which is used to be realized with the toll road policy in China. More than 8% of the total highway mileage or nearly all newly constructed roads, bridges and tunnels are toll roads, and the toll revenue is used for not only construction bonds, loans or investment repayment but also maintenance in practice. Toll road is a relatively rational and stable channel of funding for traffic infrastructure construction, and plays a very important role in the sustainable development of highway transportation sector in China.

### 3.3 Major bridge projects under construction

Under the background of the National Expressway Network, China begins with a new ear of designing and constructing numerous highway bridges, which includes many remarkable projects of long-span bridges across main rivers or wide sea straits. There are at least 26 major bridges, having a central span more than 400 m, which begin to be built and will be completed in the next three years, including 9 suspension bridges, 13 cable-stayed bridges and 4 arch bridges listed in Table 2. Among these major bridge projects, the 1088m long Sutong Bridge and the 1018m long Stonecutters Bridge will create the world-recorded span length of cable-stayed bridges, and the 552

m long Caotianmen Bridge will become the longest span of arch bridges in the world by 2009, while Xihoumen Suspension Bridge with the main span of 1650m will set a new span-length record of suspension bridges with steel box girders. Taizhou Suspension Bridge with double main spans of 1080m and Ningbo Yongjiang Bridge with the 468 m main span as twin jointed cable-stayed bridges are also challenged in new span-length records in the world[5].

Table 2 *Being constructed major bridges with a main span over 400 m*

| Type | No | Bridge Name | Main Span | Year Built | No | Bridge Name | Main Span | Year Built |
|---|---|---|---|---|---|---|---|---|
| Suspension | 1 | Zhejiang Xihoumen | 1650m | 2008 | 6 | Guizhou Balinghe | 1088m | 2009 |
| | 2 | 4th Jiangsu Nanjing | 1418m | 2010 | 7 | Jiangsu Taizhou | 2×1080m | 2010 |
| | 3 | Hubei Yangluo | 1280m | 2007 | 8 | Anhui Maanshan | 2×1000m | 2010 |
| | 4 | Hunan Aizhai | 1146m | 2009 | 9 | Guizhou Beipanjiang | 888m | 2009 |
| | 5 | Guangdong Huangpu | 1108m | 2008 | | | | |
| Cable-Stayed | 1 | Jiangsu Sutong | 1088m | 2008 | 8 | Zhoushan Jintang | 620m | 2008 |
| | 2 | H.K. Stonecutters | 1018m | 2009 | 9 | Wuhan Tianxinzhou | 504m | 2008 |
| | 3 | Hubei Edong | 926m | 2009 | 10 | Zhanjiang Bay | 480m | 2007 |
| | 4 | Hubei Jingsha | 816m | 2009 | 11 | Zhejiang Ningbo | 464m×2 | 2010 |
| | 5 | Shanghai Yangtze | 730m | 2009 | 12 | Sichuan Fuling | 450m | 2008 |
| | 6 | Shanghai Minpu | 708m | 2009 | 13 | Hangzhou Bay | 448m | 2008 |
| | 7 | Zhejiang Xiangshan | 688m | 2009 | | | | |
| Arch | 1 | Chongqin Caotianmen | 552m | 2009 | 3 | Chongqing Caiyuanba | 420m | 2008 |
| | 2 | Guangdong Xinguang | 428m | 2008 | 4 | 4th Hunan Xiantan | 400m | 2007 |

## 4. Aerodynamic Challenge on Suspension Bridges

The construction of long-span suspension bridges has experienced a considerable development for more than one century in the world. It took about 54 years that span length of suspension bridges grew from 483 m in Brooklyn Bridge in 1883 to 1,280 m in Golden Gate Bridge in 1937, and had an increase by a factor of about 2.7. Although the further increase in the next 61 years from Golden Gate Bridge to Akashi Kaikyo Bridge in 1998 was only 1.6, another increase factor about 1.6 will be realized in Messina Strait Bridge with a 3,300 m main span within 14 years in 2012. With the ever-growing span-length of suspension bridges, bridge structures are becoming lighter and more flexible, whose structural characteristics result in great challenge on bridge wind resistance, in particular, aerodynamic instability including flutter and torsional divergence.

### 4.1 The box-girder suspension bridge with a central stabilizer

Among thirteen completed long-span suspension bridges in China, Jiangsu Runyang Bridge completed in 2005 is the longest suspension bridge in China and the third longest one in the world behind Akashi Kaikyo Bridge and Great Belt Bridge. The bridge connects Zhenjiang City and Yangzhou City over Yangtze River at Jiangsu Province in the eastern China. The main section of the bridge was designed as a typical three-span suspension bridge with the span arrangement of 600m + 1490m 600m shown in Fig. 7. The deck cross section is a traditional closed steel box, 36.3 m wide and 3 m deep, and carries three 3.75 m wide traffic lanes in each direction with 3.5 m wide shoulders on both sides to increase the distance between traffic and the bridge edge to provide an emergency parking zone plotted in Fig. 8. The box girder is equipped with classical barriers and sharp fairings intended to improve the aerodynamic streamlining as well as aesthetic quality.

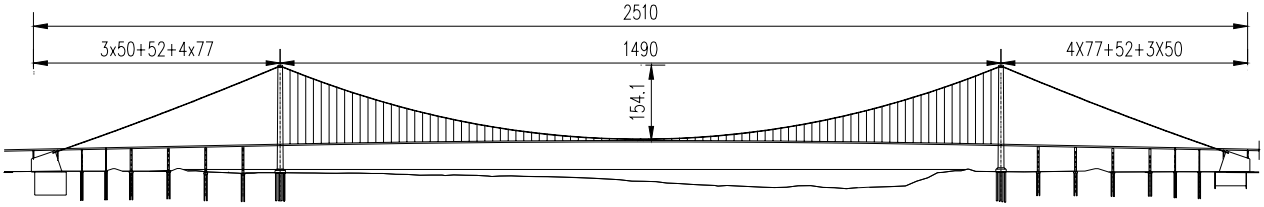


Fig. 7 *Elevation of Jiangsu Runyang Bridge (Unit: m)*

With the structural properties provided in the reference [6], the finite element analysis of dynamic characteristics of the prototype bridge was performed, and the symmetrical and antisymmetrical

fundamental natural-frequencies of lateral, vertical and torsional vibration modes were numerically extracted and compared with those of the box-girder suspension bridges, including Great Belt Bridge in Denmark and Zhoushan Xihoumen Bridge mentioned below in Table 3. The fundamental vertical and lateral vibration frequencies of Jiangsu Runyang Bridge are reasonable, but the torsional vibration frequencies are relative lower than those of the other two bridges mainly because of the small depth of the box section.

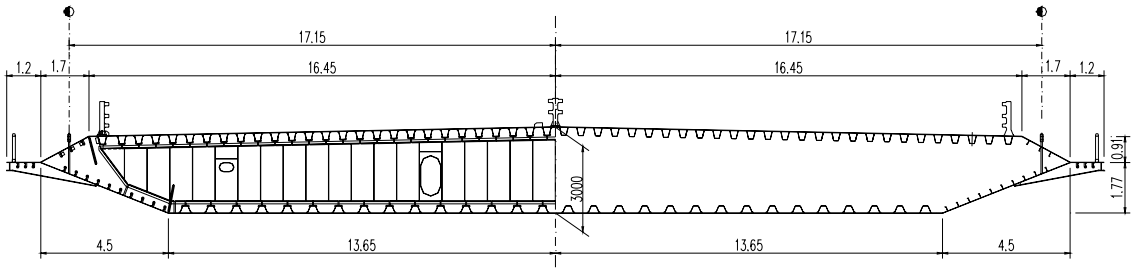


Fig. 8 *Deck cross-section of Jiangsu Runyang Bridge (Unit: m)*

Table 3 *Fundamental natural frequencies of lateral, vertical and torsional vibration modes*

| Bridge Name | Span (m) | Lateral Frequency (Hz) | | Vertical Frequency (Hz) | | Torsional Frequency (Hz) | |
|---|---|---|---|---|---|---|---|
| | | Symmetric | Antisymm. | Symmetric | Antisymm. | Symmetric | Antisymm. |
| Runyang | 1490 | 0.0489 | 0.1229 | 0.1241 | 0.0884 | 0.2308 | 0.2698 |
| Great Belt | 1624 | 0.0521 | 0.1180 | 0.0839 | 0.0998 | 0.2780 | 0.3830 |
| Xihoumen | 1650 | 0.0484 | 0.1086 | 0.1000 | 0.0791 | 0.2323 | 0.2380 |

With the emphasis on aerodynamic stability, the wind tunnel experiment with the 1:70 sectional model was carried out in the TJ (Tongji University) -1 Boundary Layer Wind Tunnel with the working section of the 1.8 m width, the 1.8 m height and the 15 m length. It was found in the first phase of the testing that the original structure cannot meet the requirement of flutter speed of 54 m/s. Some preventive means had to be considered to stabilize the original structure. With adopted a stabilizer on the central deck shown in Fig. 8, the further sectional model testing was conducted, and the confirmation wind tunnel tests with the full aeroelastic model was also performed in TJ-3 Wind Tunnel with the working section of the 15 m width, the 2 m height, and the 14 m length. The critical flutter speeds obtained from sectional model (SM) and full model (FM) wind tunnel tests are collected and compared in Table 4. Both experimental results have good agreement with each other and the central stabilizer of the 0.88 m height can improve the critical flutter speed over the required value[6].

Table 4 *Critical flutter speeds of Jiangsu Runyang Bridge*

| Deck Box Girder Configuration | Critical flutter speed (m/s) | | | | Required (m/s) |
|---|---|---|---|---|---|
| | SM at 0° | FM at 0° | SM at +3° | FM at +3° | |
| Original box girder | 64.4 | 64.3 | 50.8 | 52.5 | 54 |
| Box girder with a 0.65m stabilizer | | 69.5 | 58.1 | 53.8 | 54 |
| Box girder with a 0.88m stabilizer | | 72.1 | 64.9 | 55.1 | 54 |
| Box girder with a 1.1m stabilizer | | >75 | 67.4 | 56.4 | 54 |

## 4.2 The first twin-box-girder suspension bridge

Focusing the nine long-span suspension bridges under construction, Zhoushan Xihoumen Bridge will be the longest suspension bridge in China and the second longest one in the world just behind Akashi Kaikyo Bridge. Xihoumen Bridge is part of the Zhoushan Island-Mainland Connection Project linking two islands, Jintang and Cezi in Zhejiang Province. It crosses the Xihoumen channel, one of the most important national deep waterway. A very long span is required in order to minimize bridge and environmental risks due to ship collision, and to minimize technical complexity and unpredictable costs in constructing deep-water foundation.

The bridge route is selected at the shortest distance of the Xihoumen Strait between Jintang Island and Cezi Island, about 2200 m far away, with a small island near Cezi, Tiger Island, which can be used to hold on a pylon for a cable-supported bridge. If one pylon of a three-span suspension bridge sets on Tiger Island, the other one may be placed at the inclined reef of Jintang Island. The location of the pylon foundation on Jintang was compared with different span lengths, for example, above the water level with a minimum span of 1650 m, 20 m under the water surface with a 1520 m span,

35 m under the water with a 1310 m span, and so on. In order to avoid from constructing deep-water foundation, the Xihoumen Bridge is finally designed as a two-span suspended suspension bridge with the main span of 1650m, shown in Fig. 9. After the construction work began at the end of 2004, two pylons and main cables have been successively built, and the whole bridge will be completed by October 2008.

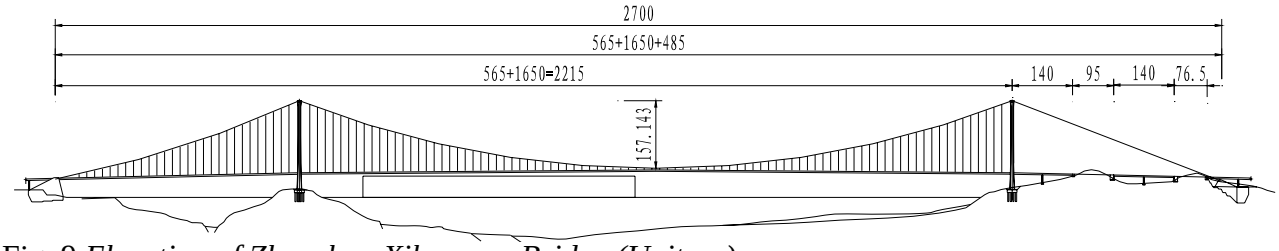


Fig. 9 *Elevation of Zhoushan Xihoumen Bridge (Unit: m)*

Based on the experience gained from the 1490 m Runyang Bridge with the flutter speed of 52 m/s and the 1624 m Great Belt Bridge with the 65 m/s flutter speed, the span length of 1600 m seems to be the intrinsic limit in the aspect of aerodynamic instability for box-girder suspension bridges, even with the more strict stability requirement of 78.4 m/s in Xihoumen Bridge. Four alternative configurations of box girders were proposed and were particularly investigated through wind tunnel tests. Apart from the traditional single box, the rest three deck sections, including the single box with a central stabilizer (Fig. 10a) and the twin box decks with the central slots of 6 m (Fig. 10b) or 10.6 m (Fig. 10c), can meet with the flutter stability requirement represented in Table 5, and the 6 m slotted twin-box girder was selected as the best scheme, which was further modified to the final configuration shown in Fig. 10d. Therefore, Xihoumen Bridge will become the first twin-box girder suspension bridge required by aerodynamic stability in the world[7].

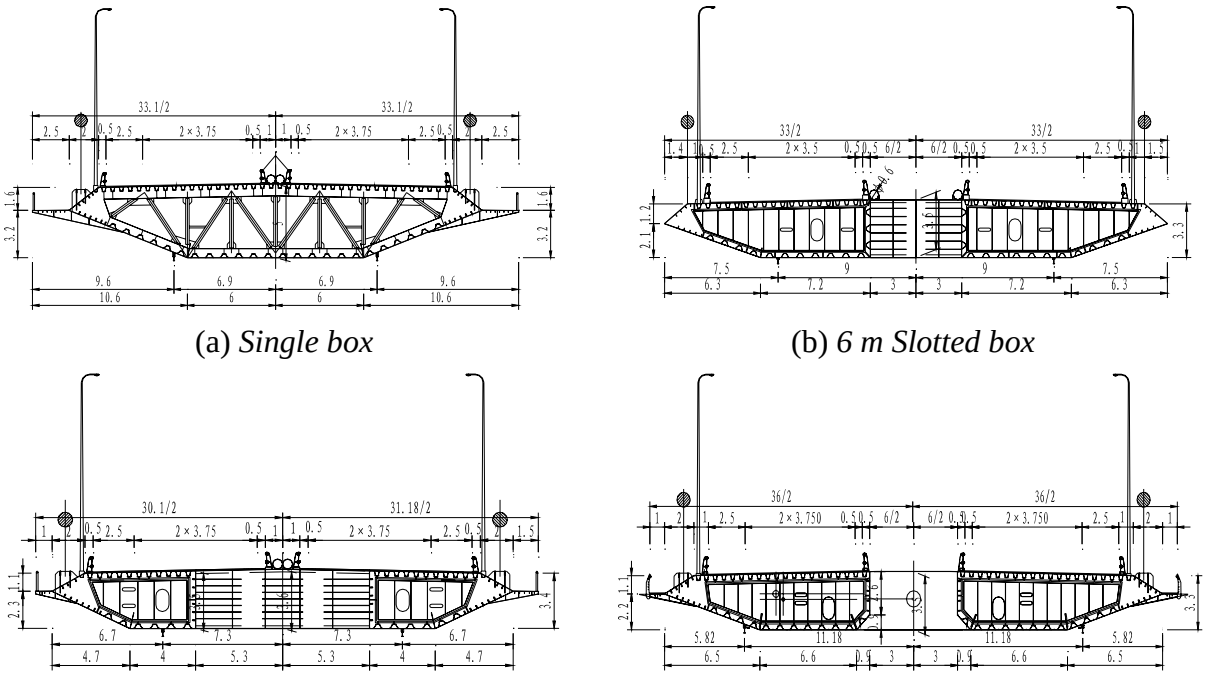

(a) *Single box* (b) *6 m Slotted box*

(c) *10.6 m Slotted box* (d) *Final scheme*

Fig. 10 *Box girder sections of Zhoushan Xihoumen Bridge (Unit: m)*

Table 5 *Critical flutter speeds of Zhoushan Xihoumen Bridge*

| Deck Box Girder Configuration | Critical flutter speed (m/s) –3° | 0° | +3° | Minimum | Required (m/s) |
|---|---|---|---|---|---|
| Single box girder | 50.7 | 46.2 | 48.7 | 46.2 | 78.4 |
| Single box with a 1.2m stabilizer | >89.3 | >89.3 | 37.7 | 37.7 | 78.4 |
| Single box with a 1.7m stabilizer | 88.0 | >89.3 | 43.4 | 43.4 | 78.4 |
| Single box with a 2.2m stabilizer | >89.3 | >89.3 | 88.0 | 88.0 | 78.4 |
| Twin boxes with a 6m slot | 88.4 | >89.3 | >89.3 | 88.4 | 78.4 |
| Twin boxes with a 10.6m slot | >89.3 | >89.3 | >89.3 | >89.3 | 78.4 |

### 4.3 The limitation of span length for suspension bridges

As a human dream and an engineering challenge, the structural engineering of bridging larger obstacles has entered into a new era of crossing wider sea straits, for example, Messina Strait in Italy, Qiongzhou Strait in China, Tsugaru Strait in Japan, and Gibraltar Strait linking European and African Continents. One of the most interesting challenges has been identified as bridge span length limitation, in particular the span limits of suspension bridges as a bridge type with potential longest span. The dominant concerns of super long-span bridges to bridge designers are basically technological feasibility and aerodynamic considerations.

To ensure the technological feasibility of suspension bridges with the longest spans, it is interesting to cope with static estimation based on material strength and weight of cables. For the central span of a typical three-span suspension bridge, by assuming the main cable shape to be parabolic, the feasible span length $L$ can be expressed by the following inequality

$$L \le \frac{8nA\sigma_a / w_c}{\sqrt{1+16n^2}\left(1+w_s/w_c\right)} \tag{1}$$

in which, $n$ – ratio of cable sag to span;
$\sigma_a$ – allowable stress of cables, and $\sigma_a \cong 0.5\sigma_u$ ($\sigma_u$ = ultimate stress);
$A$ – cable area of wires;
$w_c$ – cable weight per unit length, and $w_c \cong 1.1A\gamma_c$ ($\gamma_c$ = material density);
$w_s$ – deck weight per unit length including dead weight and live loads of traffic.

If the weight ratio $w_s/w_c$ approached to zero, the ultimate span length $L_\infty$ could be approximately obtained with cable materials including high strength steel, GFRP (glass fibre reinforced plastics) and CFRP (carbon fibre reinforced plastics) under the sag-span ratios of 1/8 and 1/11 as follows

$$L_\infty = \frac{4n\lambda}{\sqrt{1+16n^2}} \cong \begin{cases} \dfrac{80{,}000n}{\sqrt{1+16n^2}} \ (Steel) \cong \begin{cases} 8900m & (n=1/8) \\ 6800m & (n=1/11) \end{cases} \\ \dfrac{100{,}000n}{\sqrt{1+16n^2}} \ (GFRP) \cong \begin{cases} 11100m & (n=1/8) \\ 8500m & (n=1/11) \end{cases} \\ \dfrac{240{,}000n}{\sqrt{1+16n^2}} \ (CFRP) \cong \begin{cases} 26700m & (n=1/8) \\ 20400m & (n=1/11) \end{cases} \end{cases} \tag{2}$$

in which, $\lambda$ is the ratio of ultimate stress $\sigma_u$ to equivalent density $1.1\gamma_c$, and the values of $\lambda$ are about 20,000 m, 25,000 m and 60,000 m for steel, GFRP and CFRP, respectively. Equation (1) can be simplified as

$$L \le \frac{L_\infty}{1+w_s/w_c} \tag{3}$$

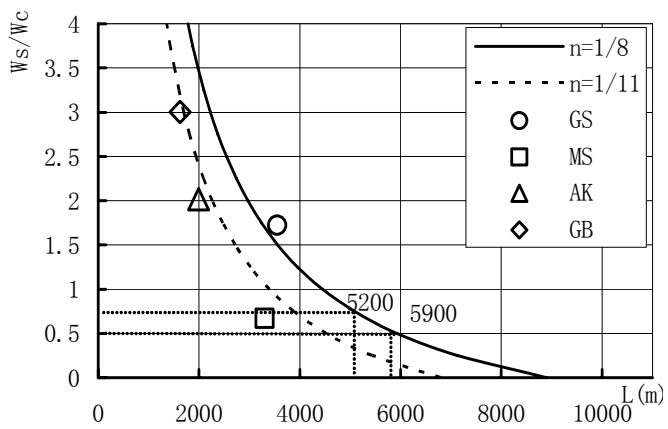


Fig. 11 *Span length versus weight ratio*

With the application of steel cables, the relationship between span length $L$ and weight ratio $w_s/w_c$, Eq. (3), can be plotted as Fig. 11, in which additional four dots represent four bridges including Great Belt (GB), Akashi Kaikyo (AK), Messina Bridge (MS) and Gibraltar Bridge (GS). In order to follow the requirement of Equation (3), the bridge span and weight ratio should be kept in the area of the lower left of the appropriate curve corresponding to the sag-span ratio. If the weight ratios are selected as $w_s/w_c$ = 0.7 like Messina Strait Bridge and even $w_s/w_c$ = 0.5, the span length can be enlarged up to 5,200 m and 5,900 m, respectively.

As a trial design scheme, a typical three-span suspension bridge with a 5,000 m central span and two 1,600 m side spans is considered as the limitation of span length and shown in Fig. 12. In order to improve aerodynamic stability limit, two kinds of generic deck sections, widely slotted deck (WS) without any stabilizers in Fig. 13a and narrowly slotted deck with vertical and horizontal stabilizers (NS) in Fig. 13b, were investigated. The WS cross section has a total deck width of 80 m and four main cables for a 5,000 m spanned suspension bridge while the NS provides a narrower deck solution of 50 m and two main cables[8].

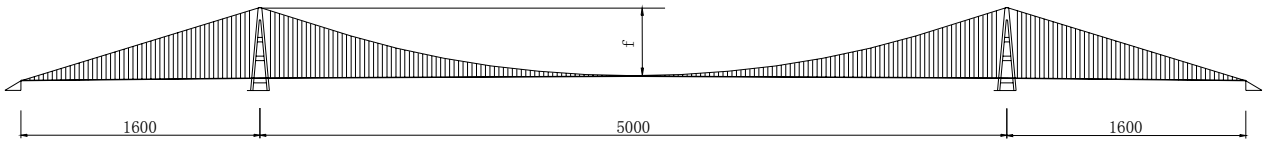


Fig. 12 *Elevation of the suspension bridge scheme with a 5,000 m central span (Uuit: m)*

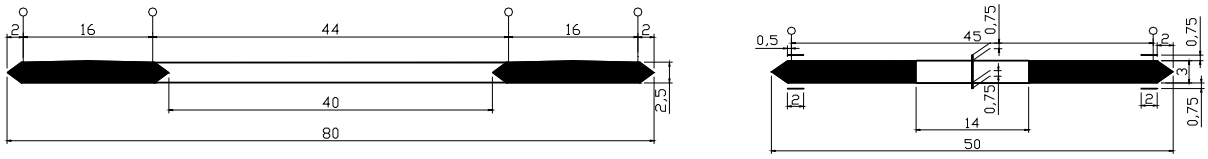


(a) *WS Cross section* (b) *NS Cross section*

Fig. 13 *Geometry of deck sections of WS and NS*

Having performed a dynamic finite-element analysis based on the structural parameters listed in Table 6, the fundamental natural frequencies of the structures have been extracted for all four ratios *n* and the two deck configurations in Table 7. The fundamental lateral bending frequencies vary about 16% for the WS section and 17% for the NS section from *n* =1/8 to *n* =1/11, but almost keep in the same value between the WS and NS deck configurations. The fundamental vertical bending frequencies are not influenced significantly by both deck configurations and the sag-span ratios. The variation of the fundamental torsional frequencies follow different ways with the ratio *n* in the two deck configurations, in which the frequency values go up in the WS section and go down in the NS section with the decrease of the ratio *n*, but it is interesting to see that the frequency ratio of torsion to vertical bending monotonically decrease with the reduction of the ratio *n*.

Table 6 *Parameters of stiffness and mass of the 5,000m suspension bridge*

| Section | Main Cables | | | Stiffening Girder | | | |
|---|---|---|---|---|---|---|---|
| | $EA$ (Nm$^2$) | $m$ (kg/m) | $I_m$ (kgm$^2$/m) | $EI_y$(Nm$^2$) | $GI_d$(Nm$^2$) | $m$ (kg/m) | $I_m$(kgm$^2$/m) |
| WS | $0.61\sim1.12\times10^6$ | $2.62\sim4.82\times10^4$ | $2.36\sim4.33\times10^7$ | $4.7\times10^{11}$ | $2.8\times10^{11}$ | 24000 | $2.16\times10^7$ |
| NS | $0.61\sim1.12\times10^6$ | $2.62\sim4.82\times10^4$ | $1.27\sim2.33\times10^7$ | $8.1\times10^{11}$ | $4.1\times10^{11}$ | 24000 | $5.40\times10^6$ |

Table 7 *Fundamental natural frequencies of the 5,000m suspension bridge*

| Ratio | Lateral Frequency (Hz) | | Vertical Frequency(Hz) | | Torsion Frequency (Hz) | | Frequency Ratio | |
|---|---|---|---|---|---|---|---|---|
| | WS | NS | WS | NS | WS | NS | WS | NS |
| $n$ = 1/8 | 0.02199 | 0.02156 | 0.05955 | 0.05936 | 0.07090 | 0.09073 | 1.191 | 1.528 |
| $n$ = 1/9 | 0.02322 | 0.02285 | 0.06126 | 0.06115 | 0.07207 | 0.08928 | 1.176 | 1.460 |
| $n$ = 1/10 | 0.02438 | 0.02406 | 0.06219 | 0.06204 | 0.07268 | 0.08653 | 1.168 | 1.395 |
| $n$ = 1/11 | 0.02548 | 0.02520 | 0.06237 | 0.06219 | 0.07269 | 0.08403 | 1.165 | 1.351 |

With the dynamic characteristics given above and the numerically identified flutter derivatives, the critical wind speeds of the suspension bridges were calculated by multi-mode flutter analysis assuming a structural damping ratio of 0.5%. The analysis results of critical wind speeds together with the generalized mass and mass moment of inertia are summarized in Table 8. For both deck sections the critical wind speed increases with the decrease of the ratio *n*, although the frequency ratio of torsion to vertical bending slightly decreases. The most important reason is because of the considerable increase of the generalized properties in the aerodynamic stability analysis. The minimum critical wind speeds for the WS and NS sections are 82.9 m/s and 74.7 m/s, respectively[9].

After conducted the iteration approach in aerostatic stability calculation, the critical wind speeds due to aerostatic torsional stability for the WS deck section are 90 m/s for the ratio of *n* = 1/8, and 110 m/s for *n* = 1/11, respectively, while the values for the NS deck section are 120 m/s for the ratio of *n* = 1/8, and 135 m/s for *n* = 1/11, respectively. The main reason for wind-induced torsional divergence of the suspension bridge is related to nonlinear deck deformation under static wind

loading, whose direction and magnitude change with effective angles of attack[9].

Table 8 *Critical flutter wind speeds of the 5,000m suspension bridge*

| Ratio | $m$ ($\times 10^4$kg/m) | | $I_m$ ($\times 10^7$kgm$^2$/m) | | $f_h$ (Hz) | | $f_\alpha$ (Hz) | | $U_{cr}$ (m/s) | |
|---|---|---|---|---|---|---|---|---|---|---|
| | WS | NS | WS | NS | WS | NS | WS | NS | WS | NS |
| $n$ = 1/8 | 6.01 | 6.79 | 5.28 | 2.37 | 0.05955 | 0.05936 | 0.07090 | 0.09073 | 82.9 | 74.7 |
| $n$ = 1/9 | 6.27 | 7.43 | 5.36 | 3.22 | 0.06126 | 0.06115 | 0.07207 | 0.08928 | 88.8 | 77.4 |
| $n$ = 1/10 | 6.73 | 8.33 | 5.92 | 3.29 | 0.06219 | 0.06204 | 0.07268 | 0.08653 | 90.9 | 78.9 |
| $n$ = 1/11 | 7.66 | 9.52 | 6.77 | 3.62 | 0.06237 | 0.06219 | 0.07269 | 0.08403 | 98.9 | 82.7 |

Having made the aerodynamic design, analysis and comparison, it can be finally concluded that either an enough-widely slotted deck or a narrowly slotted deck with central and horizontal stabilizers could provide a 5,000 m span-length suspension bridge with high enough critical wind speeds, due to both flutter vibration and torsional divergence, which can meet the aerodynamic requirement from most typhoon-prone areas in the world.

## 5. Bridging Capability Challenge on Other Bridge Types

Apart from the rapid increase of span length of suspension bridges, cable-stayed bridges and arch bridges have also gone through a constant enlargement in span length for about two decades in China. At the beginning of the 1990's, Shanghai Nanpu Bridge, a cable-stayed bridge with the third longest span (423 m) in the world, was successfully built by Chinese, as a milestone in the construction history of modern long-span bridges in China, which brought about a high tide of construction of long span bridges, in particular, of cable-stayed bridges and arch bridges with challenging span length in the world.

### 5.1 Cable-stayed bridges with world record span

Cable-stayed bridge is a modern type of long-span bridges and has rapidly developed all over the world since the Second World War. Cable-stayed bridge has become the most popular type of long-span bridges in China for the past two decades. In 1993, Shanghai Yangpu Bridge with the main span of 602 m once became the longest span cable-stayed bridge in the world. Although this record was quickly surpassed by Normandy Bridge in 1994 and Tatara Bridge in 1997, China already has the other eight longest span cable-stayed bridges among top ten ones in the world, and is currently constructing three record-breaking span length cable-stayed bridges, including the 1088 m Jiangsu Sutong Bridge, the 1018 m Hong Kong Stonecutters Bridge and the 926 m Hubei Edong Bridge.

Jiangsu Sutong Bridge, connecting Suzhou City and Nantong City over Yangtze River in Eastern China, consists of seven steel deck spans including a 1088 m long central span and three spans of 300m + 100m + 100m on both sides. The cross-section of the deck is a streamlined orthotropic steel box, 35.4 m wide and 4 m deep, with two vertical webs required by the longitudinal load distribution. This box-girder carries three 3.75 m wide lanes of traffic in each direction with 3.5 m wide hard shoulders to provide an emergency parking zone shown in Fig. 14[10]. The erection of the steel deck was completed in June 2007, and the bridge will be open for traffic by May 2008.

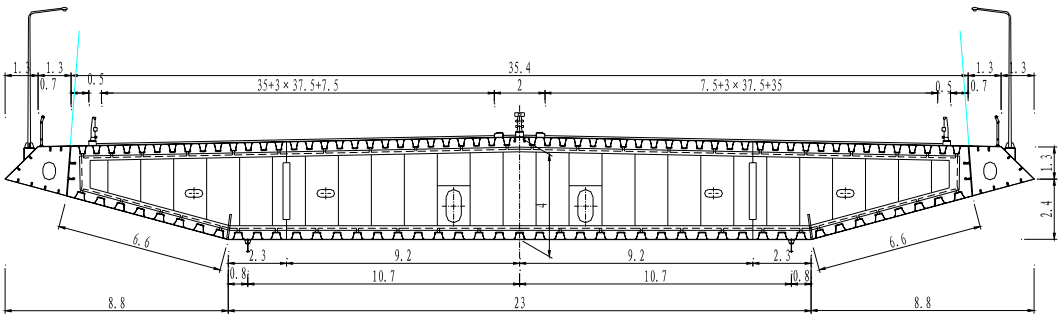


Fig. 14 *Deck cross-section of Jiangsu Sutong Bridge (Uuit: m)*

Hong Kong Stonecutters Bridge is composed of nine spans including a 1018 m long central span with steel deck and four spans of 79.75m + 70m + 70m + 69.25m on both sides with concrete deck. The cross-section of steel deck is twin streamlined orthotropic steel boxes, 2×15.9 m wide and 3.9 m deep. This twin box girder carries three traffic lanes of 11 m width in each direction with 3.3 m

wide hard shoulders for emergency parking shown in Fig. 15[11]. Two pylons of this bridge are currently under construction, and the whole bridge is scheduled to be completed by 2009.

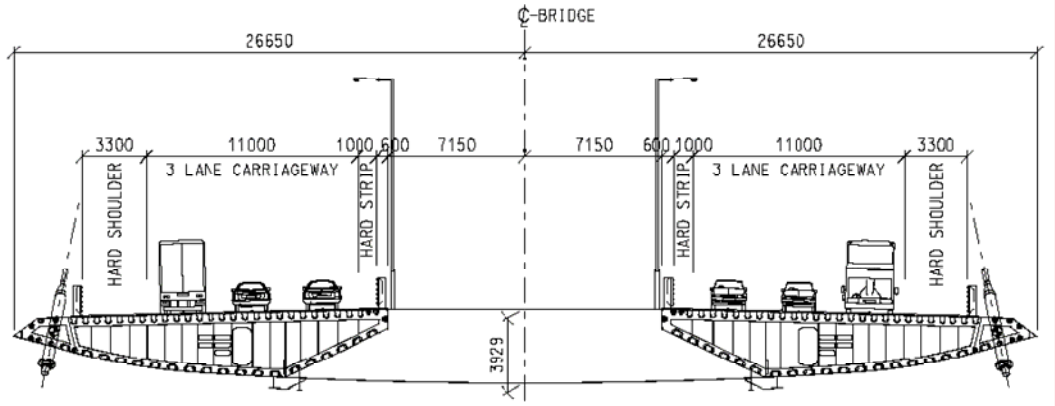


Fig. 15 *Deck cross-section of Hong Kong Stonecutters Bridge (Uuit: mm)*

Hubei Edong Bridge over Yangtze River is a nine span hybrid cable-stayed bridge with a 926 m long central span with steel deck and four spans of 85m + 65m + 65m + 65m on both sides with concrete deck. After having made the comparison of dynamic and aerodynamic characteristics with a triditional closed box in Table 9, the cross-section of steel deck is designed as two separate box girder with the total deck width of 34.4 m and the depth of 3.8 m, without the bottom plate of a box at the centre part to save steel material, shown in Fig. 16[12]. The foundations of the bridge are being built at present, and the whole bridge will be finished by 2009.

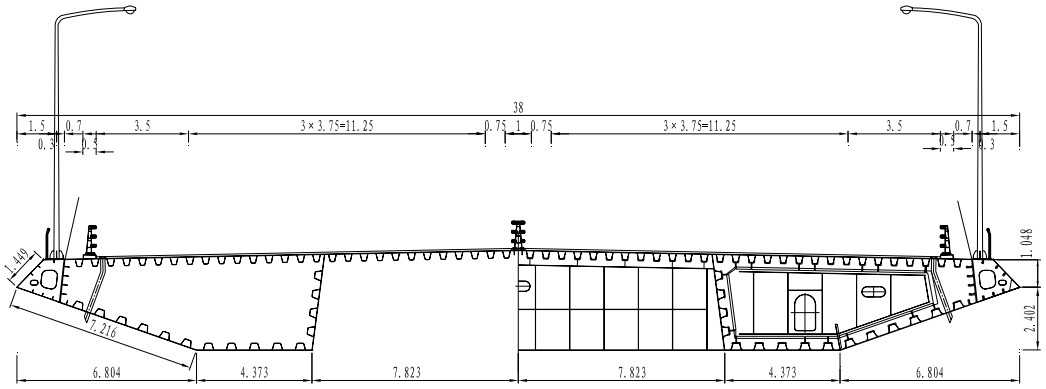


Fig. 16 *Deck cross-section of Hubei Edong Bridge (Uuit: m)*

Table 9 *Fundamental natural frequencies and flutter speeds of Hubei Edong Bridge*

| Cross Section | Lateral Frequency (Hz) | | Vertical Frequency(Hz) | | Torsion Frequency (Hz) | | Flutter |
|---|---|---|---|---|---|---|---|
| | Symmetric | Antisymm. | Symmetric | Antisymm. | Symmetric | Antisymm. | Speed (m/s) |
| Two boxes | 0.1525 | 0.4161 | 0.2351 | 0.2958 | 0.5476 | 0.8068 | 81 |
| Single box | 0.1737 | 0.4519 | 0.2382 | 0.2999 | 0.6199 | 0.9163 | 92 |

One of the most challenge problems suffered in these three cable-stayed bridges is the long stay cable aerodynamics under windy and/or rainy weather conditions. The wind tunnel testing of the prototype cable sections, the outer diameters of 139 mm and 158 mm, were carried out in dry-wind and rain-wind situations. It was found that cable vibration is much severe under the rain-wind condition than under the dry-wind condition, and the maximum amplitudes of these two sections exceed the allowable value of length/1700. Two kinds of countermeasures including spiral wires and dimples against rivulets on cable surface were tested and were proven to be effective to reduce vibration amplitudes less than the requirement. It is suggested for stay cables to be equipped with either spiral wires or dimples on cable surface as well as mechanical dampers at both ends[13].

## 5.2 The longest arch bridge

Arch bridge is an ancient type of medium and/or long span bridge. China has an ancient history of arch bridge construction for about 2,000 years. Although China fell behind the western countries in

arch bridge construction from the 19th to 20th century, several remarkable arch bridges with the longest span length in the world have been built in this new century, for example, the first Wanxian Bridge as the longest concrete arch bridge, Sichuan Wushan Bridge as the longest arch bridge with steel-tube-filled-with-concrete arch ribs and Shanghai Lupu Bridge as the longest steel arch bridge. In particular, a new world's record span length arch bridge, Chongqing Caotianmen Bridge, is under construction of the superstructure and will be completed by 2008.

Chongqing Caotianmen Bridge over Yangtze River is a continuous steel arch-truss bridge with two 190 m long side spans and a main span of 552 m, which will be the longest span of arch bridges in the world instead of the 550m Lupu Arch Bridge completed in 2003 in Shanghai China. The arch sag from the crown to the bases is 142 m in height, the new world record of arch bridges. Two three-span continuous arch truss ribs are 29 m wide, and 14 m high at the mid-span of the central span, 73.13 m at intermediate supports, and 11.83 m at both end supports, respectively. Both top and bottom flange members of the main truss ribs have three types of spacing, 12 m, 14 m and 16 m, with which the central span is arranged as 5×16m + 2×14m + 28×12m + 2×14m + 5×16m = 552m and each side span is designed as 8×12m + 14m + 5×16m = 190m shown in Fig. 17[14].

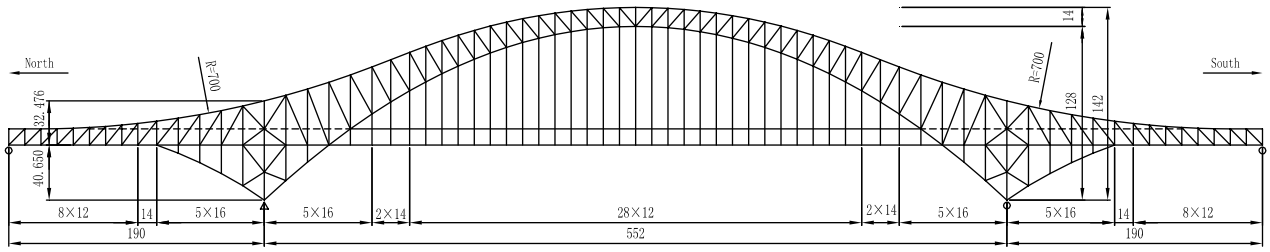


Fig. 17 *Elevation of Chongqing Caotianmen Bridge (Uuit: m)*

Steel box flange members of arch trusses support double decks, including the upper deck for six-lane highway traffic and the lower deck for two light-weight railways in the centre and one-lane highway traffic on both sides shown in Fig. 18. Both the upper and lower decks are designed as orthotropic steel plates, 16 mm thick, stiffened with U-shaped ribs and plate-girder diaphragms spaced at 3 m longitudinally. The lower deck is supported by two small truss beams at the deck centre for two light-weight-railway loads and by two I-shaped beams on both sides of the deck for one-line-highway loads while the upper deck is sit on six I-shaped beams. All longitudinal I-shaped beams and small truss beams accordingly transform the deck load to the cross beams located at the main truss joints[14].

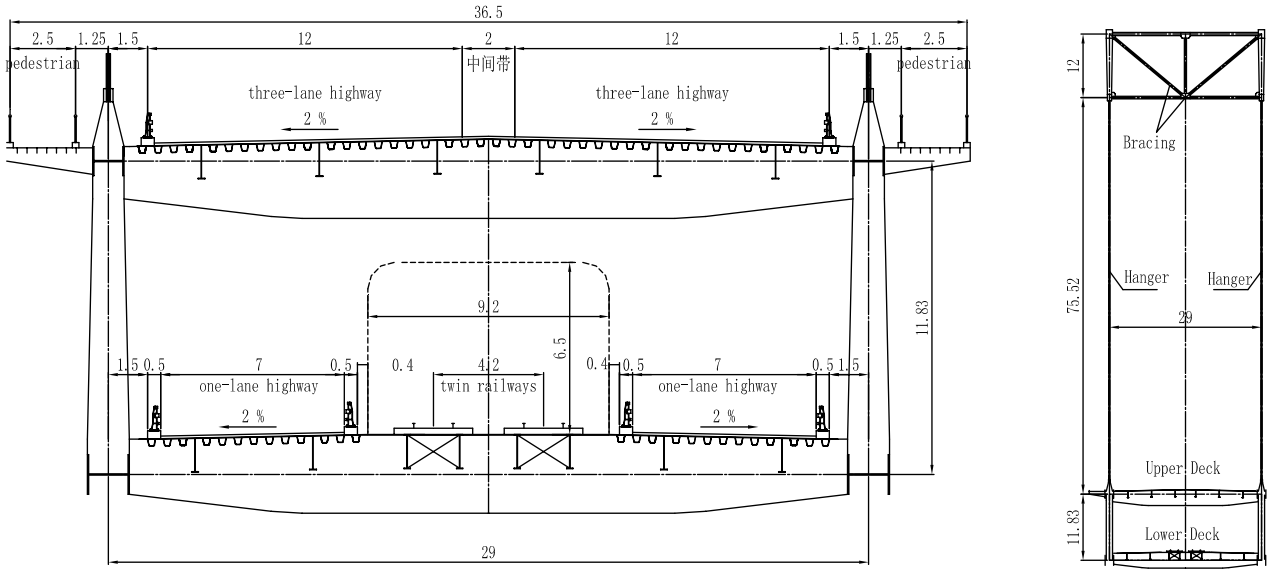


Fig. 18 *Double deck system of Chongqing Caotianmen Bridge (Uuit: m)*

## 6. Technical Challenge on Double Main Spans and Twin Parallel Decks

The other technical challenge faced in China is resulted from bridging longer water body with

double main spans and providing wider traffic passageway with twin parallel decks. Jiangsu Taizhou Bridge as a double main span suspension bridge and Ningbo Yongjiang Bridge as a twin parallel deck cable-stayed bridge are introduced with the emphasis of the rational design and analysis of the central pylon and pylon shapes and deck sections, respectively.

### 6.1 Double main span suspension bridges

Bridging wider river or sea body is always a human dream and an engineering challenge, which requires not only single longer span but also multiple main spans based on ever-growing navigational requirements and very deep water environments. Modern suspension bridge practice has provided with a three-span bridging configuration including single main span up to 2,000 m, and double or even multiple main spans scheme of suspension bridges are under development in order to challenge bridging capacity in the new century. As a pioneering work in this aspect, the COWI proposed a two-main-span suspension bridge scheme of 1055m + 1100m for Chaocao Bridge in Chile three years ago. Because of financial problem, the Chaocao Bridge project is still under the illustrative design stage. Under the background of rapid development of suspension bridges, China launched two suspension bridge projects with double main spans over 1,000 m last year. One of them is Jiangsu Taizhou Bridge over Yangtze River, which is recently under construction of the foundation and is scheduled to be completed by 2010, and the other is the under-designed Anhui Maanshan Bridge over Yangtze River.

Taking as an example, Jiangsu Taizhou Bridge, 2940 m in total length, consists of four spans including double 1,080 m main spans and two side spans of 390 m shown in Fig. 19. In general, double main span suspension bridge is an improved suspension structure with an additional central pylon, a vertical support of main cables, at the mid span of single main span suspension bridge, in order to reduce the internal forces of main cables and side anchors. With this additional central pylon, a main cable go over side pylons and a main span from both anchors, and then reach the top of the central pylon, whose characteristics are quite different from those of side pylons.

Fig. 19 *General view of Jiangsu Taizhou Bridge*

One of the most important aspects in the design of a double main span suspension bridge is the selection of the longitudinal rigidity of a central pylon, $R_p$

$$R_p = \frac{|T_1 - T_2|}{\delta_p} \tag{4}$$

in which, $T_1$ and $T_2$ are the cable forces at the both sides of the top of a central pylon; and $\delta_p$ is the longitudinal displacement at the top of a central pylon. Under the most unfavourable load condition, only one main span being loaded, the longitudinal rigidity of a central pylon dominantly controls bridge structure performance, which can be basically governed by four factors, including vertical displacement of a deck, $\delta_d$, longitudinal displacement at the top of a central pylon, $\delta_p$, maximum working stresses in a central pylon, $\sigma_{max}$ and $\sigma_{min}$, and the safety factor of sliding resistance between a main cable and a saddle pad induced by the difference of both side cable forces, $K_s$

$$K_s = \frac{\mu\theta}{\ln(T_1 / T_2)} \tag{5}$$

in which, $\mu$ is the friction factor between a main cable and a saddle pad, and $\mu$ = 0.2 based on various experiments; and $\theta$ is the angle of a saddle arc. According to the current design code for highway suspension bridges in China, the value of $K_s$ should be greater than 2. If the longitudinal rigidity of a central pylon is relatively large, which can be realized by adoping a A-shaped central pylon shown in Fig. 20a, the vertical displacement of a deck and the longitudinal displacement at the top of a central pylon will be relatively small, but the safety factor of sliding resistance and the maximum stress in a centre pylon will be relatively unfavourable. Otherwise, if the longitudinal rigidity is relatively small, for example, with using single column pylon in Fig. 20b, the deck displacement and the pylon displacement will be relatively large, and the sliding safety factor and the pylon's stresses will be relatively favourable.

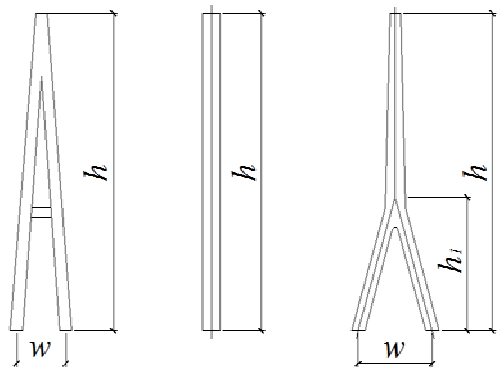


(a) *A shaped* (b) *Column* (c) *Inversed Y*

Fig. 20 *Aternatives of centre pylons*

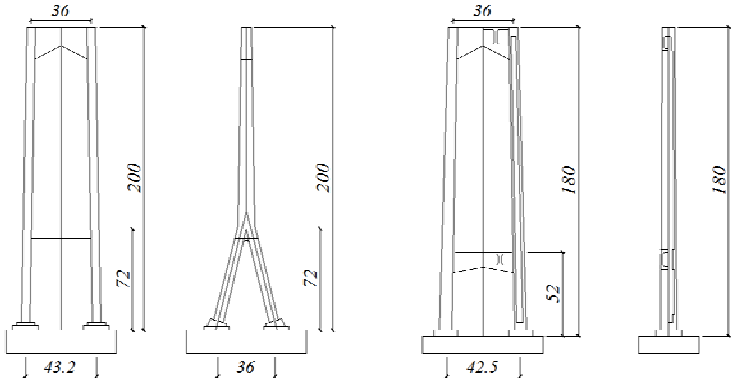


(a) *Centre pylon* (b) *Side pylon*

Fig. 21 *Final schemes of centre and side pylons*

In order to select an appropriate rigidity of a central pylon, both A-shaped steel pylon and single column concrete pylon with various shapes and cross sections had been firstly compared and contrasted through structural analysis, and the critical results of four factors, including the sliding safety factor, $K_s$, the deck displacement, $\delta_d$, the pylon displacement, $\delta_p$, and the pylon stresses, $\sigma_{max}$ and $\sigma_{min}$ are compared in Table 10. It can be concluded that the working stresses are too high in an A-shaped steel pylon, and the cross section are too large in a single column concrete pylon. Combined with the advantages of both types of pylons, an optimal scheme, inversed Y-shaped steel pylon in Fig. 20c, was then proposed and compared with various shapes and cross sections, and the critical calculation results of these four factors are also listed in Table 10. The maximum and minimum working stresses of the inversed Y-shaped steel pylon are reduced about 37% and 61%, respectively, compared to the A-shaped steel pylon under the condition of $K_s$ > 2.0. Therefore, the inversed Y-shaped steel pylon was chosen as the final scheme for a central pylon, which was further designed as Fig. 21, including side pylons[15].

Table 10 *Comparison of main factors for three types of central pylons*

| Type of Pylon | Shape (m) | | Section ($m^2$) | | $R_p$ | $K_s$ | Deck displac. | | Pylon displac. | | Stress (MPa) | |
|---|---|---|---|---|---|---|---|---|---|---|---|---|
| | $h$ | $w$ | Top | Base | MN/m | $\mu$=0.2 | $\delta_d$ (m) | $\delta_d/L^*$ | $\delta_p$(m) | $\delta_p/h$ | $\sigma_{max}$ | $\sigma_{min}$ |
| A-shaped | 182.5 | 10 | 5×5 | 3×5 | 24.94 | 1.97 | 4.513 | 1/239 | 1.809 | 1/101 | 296 | –200 |
| (steel) | 182.5 | 12 | 5×5 | 4×5 | 21.59 | 2.19 | 4.863 | 1/222 | 2.082 | 1/88 | 336 | –216 |
| Column | 0 | 0 | 6×6 | 15×10 | 27.79 | 1.90 | 4.321 | 1/249 | 1.625 | 1/112 | 28.9 | –14.2 |
| (concrete) | 0 | 0 | 6×6 | 12×10 | 25.49 | 2.00 | 4.512 | 1/239 | 1.768 | 1/103 | 28.6 | –13.5 |
| Inversed Y | 60 | 36 | 6×5 | 6×5 | 27.01 | 1.97 | 4.416 | 1/245 | 1.672 | 1/109 | 237 | –131 |
| (steel) | 55 | 36 | 6×5 | 6×5 | 25.94 | 2.02 | 4.505 | 1/240 | 1.740 | 1/105 | 245 | –134 |

*. $L$ is the main span length.

## 6.2 Twin parallel deck cable-stayed bridges

With the ever-growing traffic demands, sometimes it is necessary to build a new bridge side by side to the existed one or originally to build two parallel bridges to provide wider bridge deck, which results in twin parallel deck bridges design and construction. If the net interval between two sides of

decks is wide enough to hold on two separate foundations these two decks can be designed as two separate bridges except for aerodynamic performance. But if the net interval is so narrow that two separate decks should share with single joint foundation these two decks should be treated as a twin parallel deck bridge in the bridge design and analysis. The most challenging bridge type in the design of twin parallel deck bridges is cable-supported bridge, in particular cable-stayed bridge. To the best of the authors' knowledge, there are three twin parallel cable-stayed bridges in the world, including Onomichi Bridge with the 215 m main span in Japan, Fred Hartman Bridge with the 381 m main span in USA and Meikou Nishi Bridge with the 405 m main span in Japan, whose main parameters are listed in Table 11. During the golden period of cable-stayed bridge development in China, several twin parallel deck cable-stayed bridge projects are under design, and the longest span project is Ningbo Yongjiang Bridge with a central span of 468 m shown in Fig. 22[16].

Table 11 *Main parameters of twin parallel deck cable-stayed bridges in the world*

| Bridge Name | Country | Pylon Type | Foundation | Main Span | Deck Width | Net Interval | Interval/Width |
|---|---|---|---|---|---|---|---|
| Onomichi | Japan | A-shaped | Separate | 215 m | 10.4 m | 37.3 m | 3.6 |
| Fred Hartman | USA | Diamond | Jointed | 381 m | 23.8 m | 4.7 m | 0.2 |
| Meikou Nishi | Japan | A-shaped | Separate | 405 m | 14.5 m | 35.5 m | 7.9 |
| Yongjiang | China | Diamond | Jointed | 468 m | 23.2 m | 4.9 m | 0.2 |
| | | H-shaped | | | | 6.9 m | 0.3 |

Fig. 22 *General view of Ningbo Yongjiang Bridge*

Ningbu Yongjiang Bridge is designed as twin parallel deck cable-stayed bridges due to very wide bridge deck, and with the span arrangement of 63m + 132m + 468m + 132m + 63m, shown in Fig. 22, according to the navigational requirements in the feasibility study. Aiming at lower construction cost in China and higher structural damping for dynamic performance, both pylons and bridge decks are proposed to be made by reinforced and prestressed concrete in the preliminary design stage. Before the detailed design begins, the further comparisons of pylon types and deck sections should be made based on structural performance, in particular structural rigidity. Two types of pylons, including the twin diamond shape in Fig. 23a and the twin H shape in Fig. 23b, and three types of deck sections, including the closed box in Fig. 24a, the twin separated boxes in Fig. 24b and twin side ribs in Fig. 24c, have been compared in structural rigidity with natural vibration frequencies, and the fundamental frequency values are listed in Table 12.

Table 12 *Comparisons of fundamental natural frequencies of six alternatives*

| Bridge Deck Cross-Section | Lateral frequencies (*Hz*) | | Vertical frequencies (*Hz*) | | Torsional frequencies (*Hz*) | |
|---|---|---|---|---|---|---|
| | Diamond | H-shaped | Diamond | H-shaped | Diamond | H-shaped |
| Closed box | 0.248 | 0.279 | 0.310 | 0.302 | 0.937 | 0.896 |
| Twin separated box | 0.272 | 0.308 | 0.308 | 0.301 | 0.810 | 0.794 |
| Twin side rib | 0.306 | 0.345 | 0.310 | 0.299 | 0.599 | 0.555 |

With the comparison in total six alternatives, the fundamental frequencies of vertical vibrations are almost in same for different types of deck sections and pylon shapes. Concerning with two pylon types, the fundamental lateral frequencies with the twin diamond shaped pylons are about 13%

lower than those with the twin H-shaped pylons, but the fundamental torsional frequencies with the twin diamond shaped pylons are about 2% to 8% higher than those with the twin H-shaped pylons. The twin diamond shaped pylons have been selected for further design with considering simpler force resistance in pylons, especially for the central column. Among three types of bridge deck sections, the fundamental lateral frequencies of the twin side rib cross section are about 13% and 23% higher than those of the twin separated box cross section and the closed box cross section, respectively, but the fundamental torsional frequencies of the twin side rib section are about 26% and 36% lower than those of the twin box section and the single box section, respectively. In order to avoid from aerodynamic instability, the wind tunnel testing with 1:100 sectional models were carried for the twin side rib section as the worst case of deck flutter. It was found that the lowest critical flutter speed is 95 m/s, which is much greater than the required speed of 66 m/s. Therefore, the twin side rib cross section has been finally chosen as the most economical cross section for the detailed design[16].

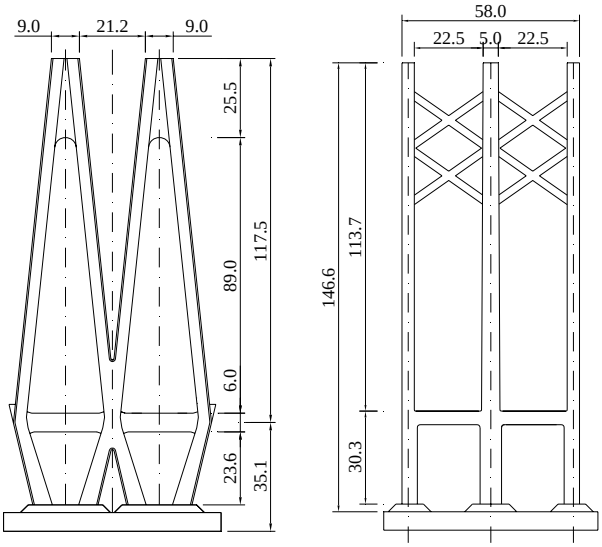


(a) *Twin diamond shaped* (b) *Twin H shaped*

Fig. 23 *Alternative types of central pylons*

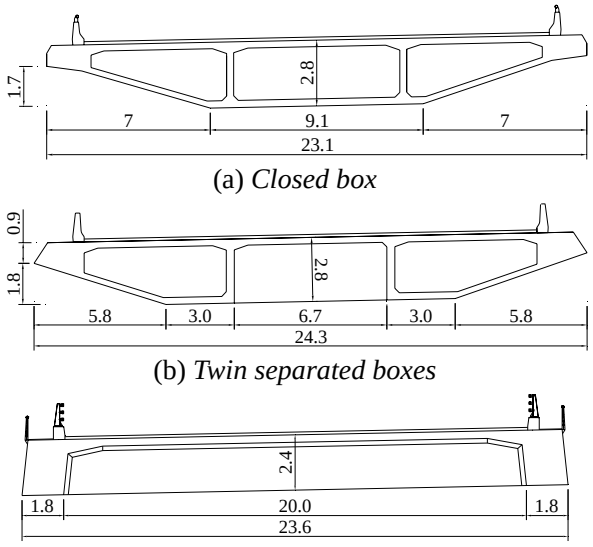


(a) *Closed box*

(b) *Twin separated boxes*

(c) *Twin side ribs*

Fig. 24 *Alternative types of deck sections*

## 7. Conclusions

With the 50 times increase of GDP in the past three decades, China has encountered the ever-growing demand and the intensive investment in improving traffic infrastructure, in particular highway transportation system. Through the realization of the national ground plans, the National Trunk Highway System and the National Expressway Network, the total number respectively reached 1.93 million kilometres in highway mileage including 41,005 km expressway, and 14,700 linear kilometres in highway bridges covering about 336,600 bridges, among which there are 38 major bridges with a main span over 400 m, including 13 suspension bridges, 22 cable-stayed bridges and 3 arch bridges. The longest span lengths are raised up to 1490m for suspension bridges, 648m for cable-stayed bridges, 550m for arch bridges, respectively.

In order to meet with the great demand in highway bridge development, China is now under the new process of designing and constructing 26 remarkable projects of long-span bridges having a central span more than 400 m, including 9 suspension bridges, 13 cable-stayed bridges and 4 arch bridges. Various challenges have risen in these major projects involving in aerodynamic performance of suspension bridges, bridging capacity development of cable-stayed bridges and arch bridges and the rational design and analysis of double main span or twin parallel deck bridges. Referred to aerodynamic challenge of suspension bridges, the 1490 m Runyang Bridge has added a central stabilizer on the closed box deck to slightly increase flutter critical speed over the required value, and the 1650 m Xihoumen Bridge has adopted a twin-box-girder to greatly improve aerodynamic stability against in the typhoon prone area while a 5000 m suspension bridge has employed either widely slotted box girder or narrowly slotted box girder with horizontal and vertical stabilizers as a trial design. Three cable-stayed bridges, including 1088 m Sutong Bridge, 1018 m Stonecutters Bridge and 926 m Edong Bridge, have challenged span length of cable-stayed

bridges, and Caotianmen Bridge also has a challenging span length of 552 m for arch bridges. For the other technical challenge on double main span suspension bridges and twin parallel deck cable-stayed bridges, Taizhou Bridge and Yongjiang Bridge have been rationally designed as a suspension bridge with double main spans of 1080m and a twin parallel deck cable-stayed bridge with the 468 m main span, respectively, and both of them will set new span-length records in the world.

## Acknowledgement

The work described in this paper is partially supported by the Natural Science Foundation of China under the Grant 50538050 and the Hi-Tech Research and Development Program of China under the Grant 2006AA11Z108. The dedication and efforts of our colleagues, Prof. J.Z. Song and Drs. F.C. Cao, Z.S. Guo and X.H. Luo, are highly appreciated.

## References

[1] Bureau of Statistics, *China Statistical Yearbook (2005)*, China Statistical Publishing House, Beijing, China, 2005 (in Chinese)

[2] Ministry of Communication, *Compilation of Communication Statistics (1988-2005)*, Beijing, China, 2005 (in Chinese)

[3] XIANG H.F., CHEN A.R and GE Y.J., *Major Bridges in China*, China Communications Press, Beijing, China, 2003.

[4] Ministry of Communication, *The Planning of National Expressway Network*, Beijing, China, 2005 (in Chinese)

[5] GE Y.J and XIANG H.F., "Outstanding Chinese steel bridges under construction", *Proceedings of the 6th International Symposium on Steel Bridges*, Prague, Czech Republic, June 1-3, 2006.

[6] CHEN A.R., et al., Study of Aerodynamic Performance of Runyang Bridge, *Technical Report No. WT200218*, State Key Laboratory for Disaster Reduction in Civil Engineering at Tongji University, 2002 (in Chinese)

[7] GE Y.J., et al., Refinement Study of Aerodynamic Performance of Xihoumen Bridge, *Technical Report No. WT200520*, State Key Laboratory for Disaster Reduction in Civil Engineering at Tongji University, 2005 (in Chinese)

[8] XIANG H.F. and GE Y.J., "On aerodynamic limit to suspension bridges", *Proceedings the 11th International Conference on Wind Engineering*, Texas, USA, June 2-5, 2003.

[9] GE Y.J. and XIANG H.F., "Tomorrow's challenge in bridge span length", *Proceedings of the IABSE Symposium 2006 on Responding to Tomorrow's Challenges in Structural Engineering*, Budapest, Hungary, September 13-15, 2006.

[10] PEI M.S., ZHANG X.G., YUAN H. and XU L.P., "Design of Superstructure for Sutong Bridge", *Paper Collecting of Sutong Bridge (No. 1)*, Sutong Bridge Construction Commanding Department, Chinese Science and Technology Press, 2004 (in Chinese)

[11] FALBE-HANSEN K., HAUGE L. and KITE S., "Stonecutters Bridge – Detailed design", *Proceedings of the IABSE Symposium 2004 on Metropolitan Habitats and Infrastructure*, Shanghai, China, September 22-24, 2004.

[12] SONG J.Z., et al., Wind Tunnel Study of Edong Bridge with Aeroelastic Model, *Technical Report No. WT200708*, State Key Laboratory for Disaster Reduction in Civil Engineering at Tongji University, 2005 (in Chinese)

[13] CHEN A.R., LIN Z.X. and SUN L.M. et al., Testing and Study on Wind/Rain Vibration, Force Optimisation and Vibration Mitigation of Stay Cables of Sutong Bridge, *Technical Report No. WT 200419*, State Key Laboratory for Disaster Reduction in Civil Engineering at Tongji University, 2004 (in Chinese)

[14] Chongqing Communications Research and Design Institute and China Major Bridge Reconnaissance and Design Institute, Detailed Design Drawings of Caotianmen Bridge, 2005 (in Chinese)

[15] HEN D.Z., WAN B.T. and LUO X.H., et al., Study of Taizhou Suspension Bridge with Triple Pylons and Double Main Spans, *Technical Report in Preliminary Design Stage*, Design Team of Jiangsu Taizhou Bridge Project, 2007

[16] CAO F.C., et al., Study of Aerodynamic Performance of Ningbo Yongjiang Bridge (Preliminary Design Stage), *Technical Report No. WT200601*, State Key Laboratory for Disaster Reduction in Civil Engineering at Tongji University, 2006 (in Chinese)